RayVio XD UV LEDs (280 nm)

Medium UV power density in an easy to use format

RayVio XD 280 nm Series UV LEDs deliver medium power and highly effective distributed UV light with peak spectral wavelength output of 280 nm.

These devices are designed to meet the most demanding and mission critical applications in the healthcare and well being segments.

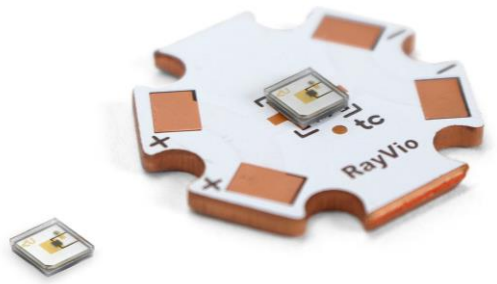

Features and Benefits

- Medium output power enables highly distributed UV light
- Industry leading reliability and lifetime.
- Proven effective for disinfection at 280 nm
- Star board package simplifies thermal engineering and allows for rapid prototyping and development

Table of Contents

Product Nomenclature **3**
Product Performance and Characterization **3**
Typical Optical Characteristics 3
Reliability **4**
Absolute Maximum Ratings **4**
Typical Characteristic Curves **5**
Mechanical Dimensions Surface Mount (SM) **7**
Mechanical Dimensions Star Board (SB) **8**
Soldering Conditions **9**
Tape and Reel **10**
Cautions on Use **11**
Eye and Skin Safety Guidelines 11
Usage and Handling 11
Cleaning 11
Static Electricity 11
Thermal Management 12
Recommended Circuit 12
About RayVio **12**

Product Nomenclature

Part numbers listed below with part descriptions are used to identify part configuration (subject to change).

Part Number	Part Description
RVXD-280-SM-071005	280nm nominal wavelength, 4mW power output, surface mount
RVXD-280-SB-071005	280nm nominal wavelength, 4mW power output, star board mount

Other wavelengths are available upon request.

Product Performance and Characterization

Typical Optical Characteristics

Table 1. Radiant Output Performance Characteristics at T_a= 25˚C

Part Number	Radiant Output @ 100mA, 25°C		
	Min. (mW)	Typ. (mW)	Max. (mW)
RVXD-280-SM-071005	3	4	5
RVXD-280-SB-071005	3	4	5

Table 2. Radiant Flux vs. Forward Current at T_a= 25˚C

Part Number	Radiant Output @ 25°C vs. Forward Current			
	Forward Current (mA)	Min. (mW)	Typ. (mW)	Max. (mW)
RVXD-280-S(x)-071005	50	1.5	2	2.5
RVXD-280-S(x)-071005	70	2	3	3.5
RVXD-280-S(x)-071005	100	3	4	5

Table 3. Electrical and Optical Characteristics at T_a= 25˚C

Characteristics	Unit	Min	Typical	Max
Peak Wavelength (@100mA)	nm	275	280	285
Forward Voltage (@100mA)	V	5	6.5	7.5
Spectrum Half Width (FWHM)	nm	-	12	-
View Angle	degrees	-	120	-
Thermal Resistance (Junction to solder point)	°C/W	-	17	-

- RayVio maintains a tolerance of ±10% on radiant flux and ±3nm on peak wavelength
- Although all LEDs are tested, some values may vary slightly depending on the conditions of the test equipment

Reliability

Table 4.

Forward Current	% of Nominal Output Power	P70 Reliability	P50 Reliability
50mA	50%	5,000 hours	10,000 hours
70mA	70%	2,500 hours	5,000 hours
100mA (nominal)	100% (nominal)	1,250 hours	2,500 hours

Absolute Maximum Ratings

Table 5.

Parameter	Maximum Performance
Power Dissipation	0.75 W
Forward Current	100mA
Junction Temperature, T_j	60°C
Storage Temperature	-30°C to 150°C
ESD Sensitivity	+/-8kV Human Body Model

Typical Characteristic Curves

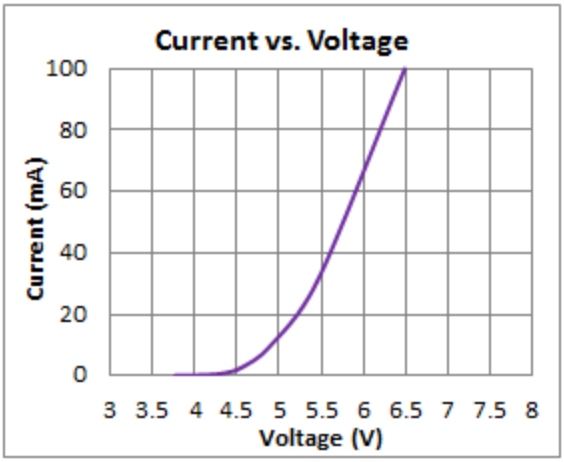

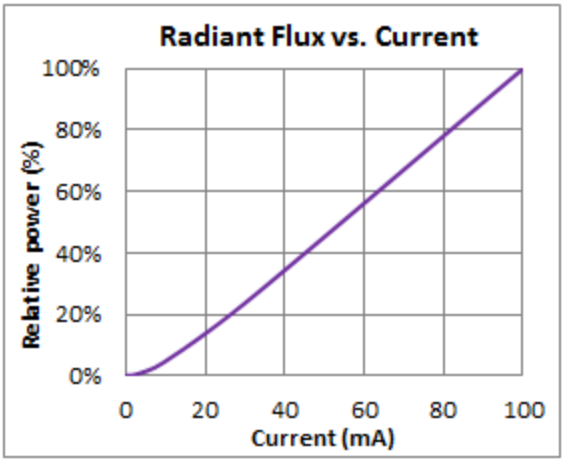

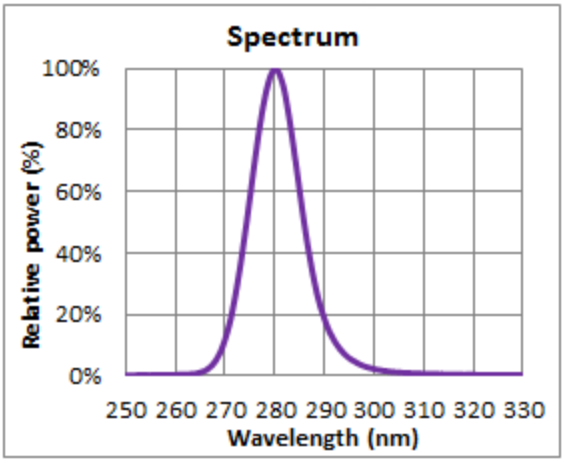

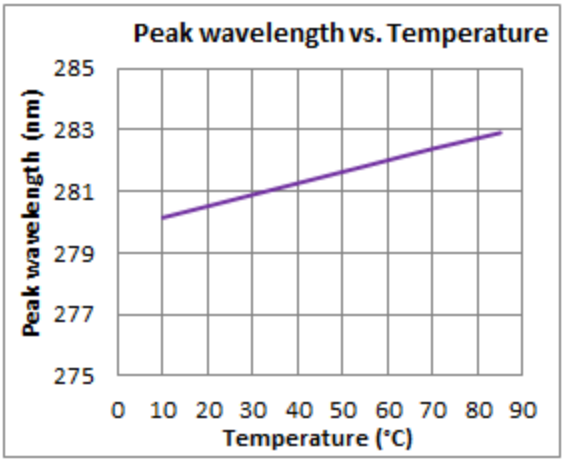

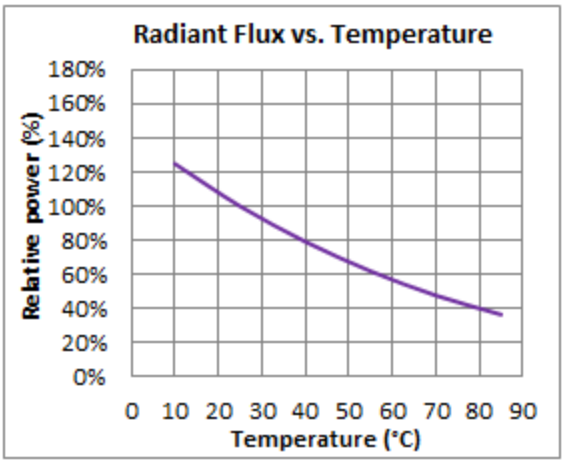

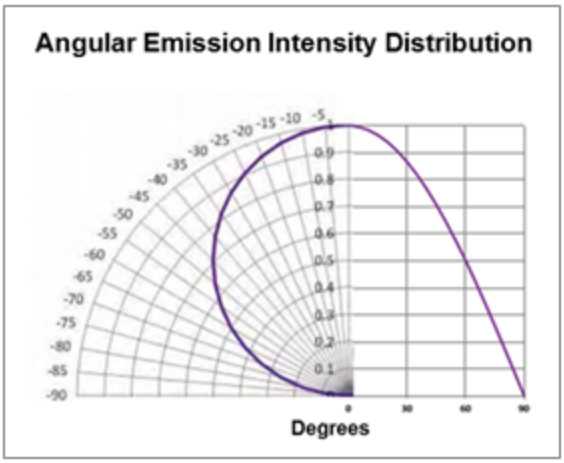

Typical Characteristic Curves

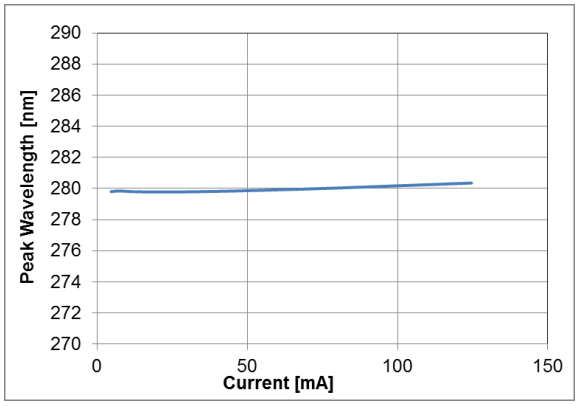

Mechanical Dimensions RVXD Surface Mount (SM)

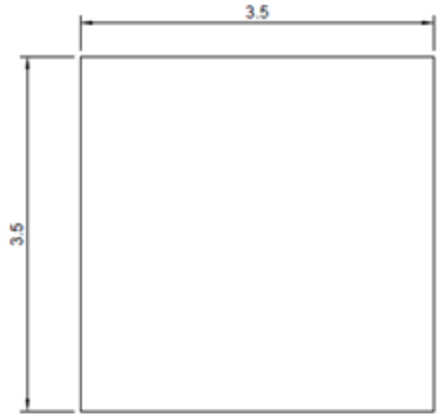

Top View

Side View

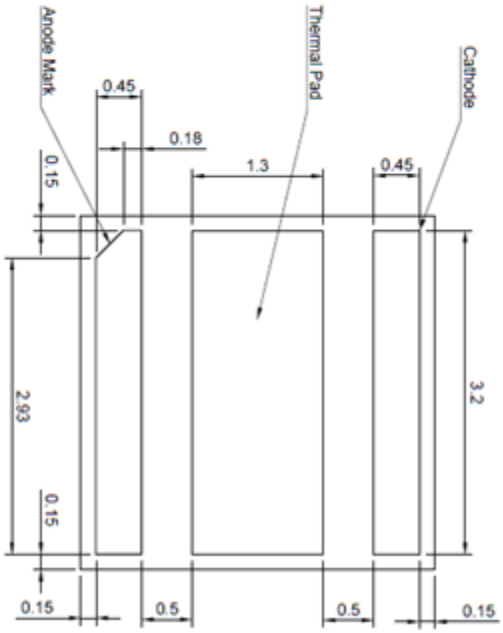

Bottom View

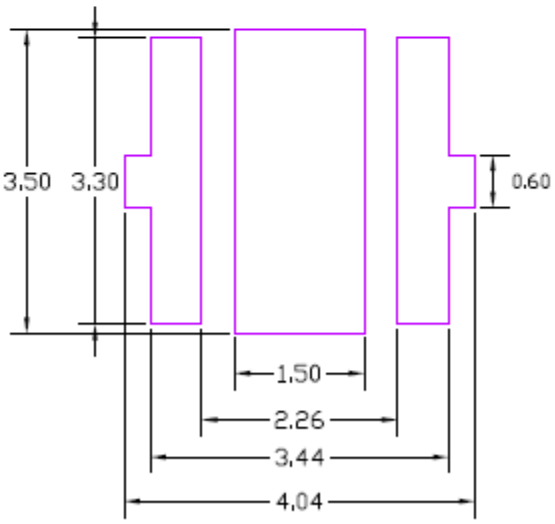

Recommended PCB solder pads

Notes:

1. All measurements in millimeters.
2. Tolerances ± 0.2mm

Mechanical Dimensions RVXD Star Board Mount (SB)

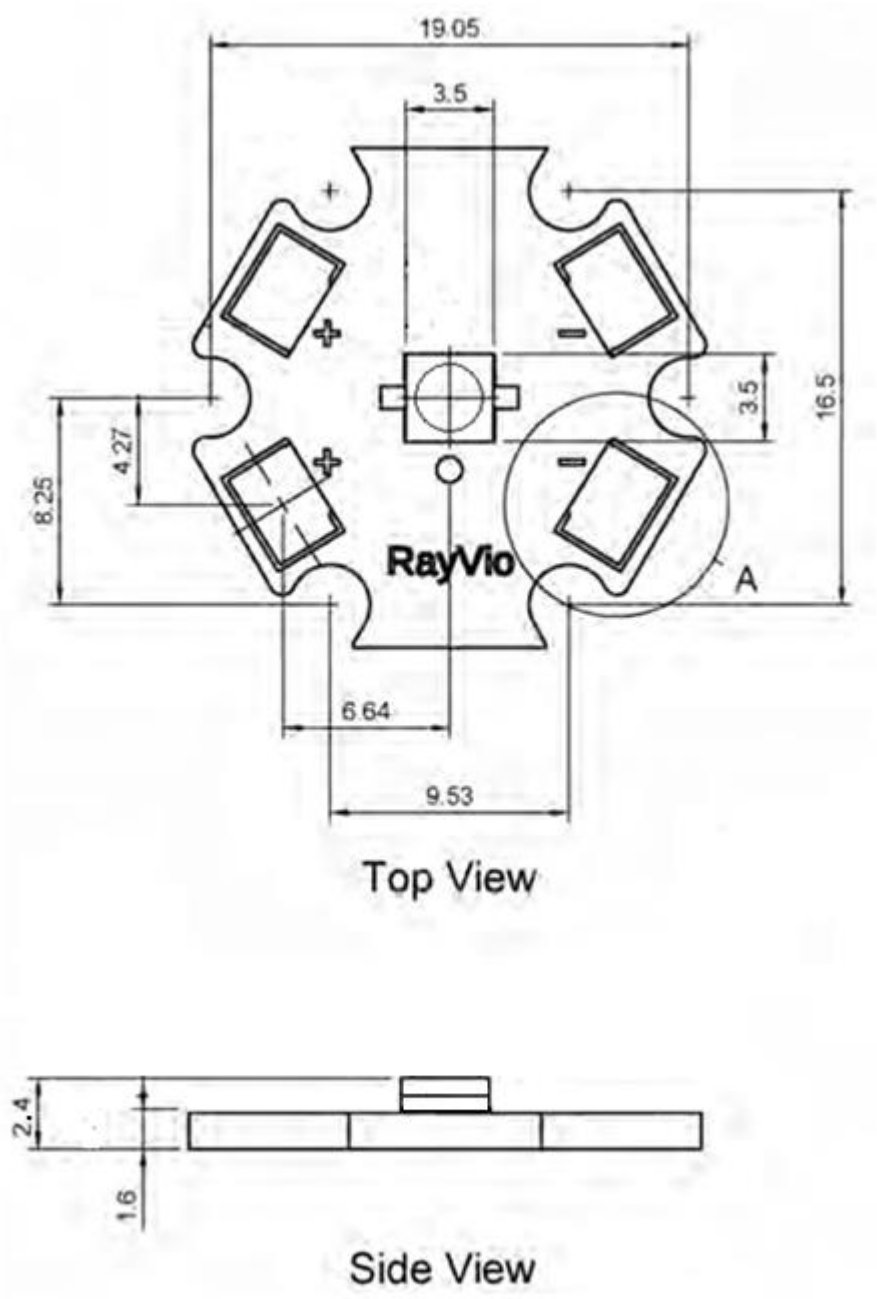

Notes:

1. All measurements in millimeters.
2. Tolerances ± 0.2mm

Soldering Conditions

Reflow soldering is the recommended method for assembling SMD packages on a circuit board.

Recommended Soldering Profile (according to JEDEC J-STD-020D)

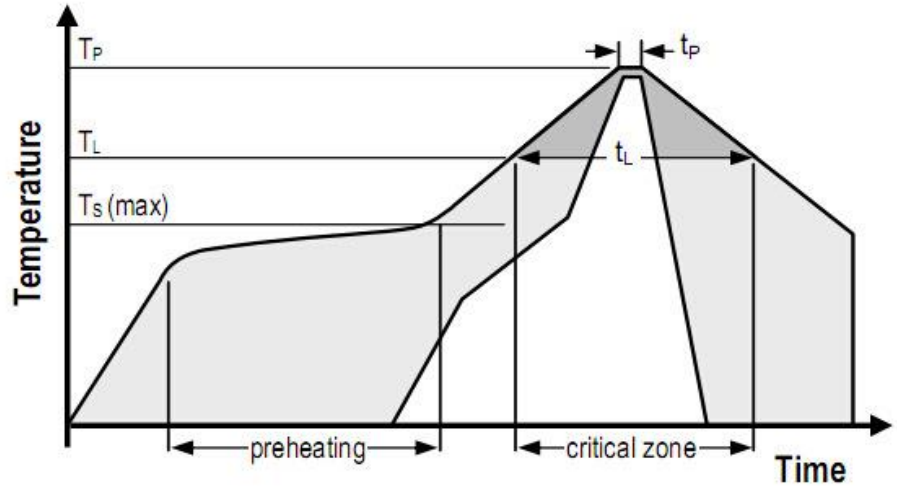

Profile Parameters	Lead-Free Solder
Average Ramp-Up Rate ($T_s$max to T_p)	3°C/second max.
Preheat: Temperature Min ($T_s$min)	150°C
Preheat: Temperature Max ($T_s$max)	200°C
Preheat: Time ($t_s$min to $t_s$max)	60-120 seconds
Time Maintained Above: Temperature (T_L)	217°C
Time Maintained Above: Time (t_L)	60-150 seconds
Peak/Classification Temperature (T_p)	250°C
Time Within 5°C of Actual Peak Temperature (t_p)	30 seconds
Ramp-Down Rate	6°C/second max
Time 25°C to Peak Temperature	8 minutes max.

Reflow soldering should not be done more than two times.

Tape and Reel

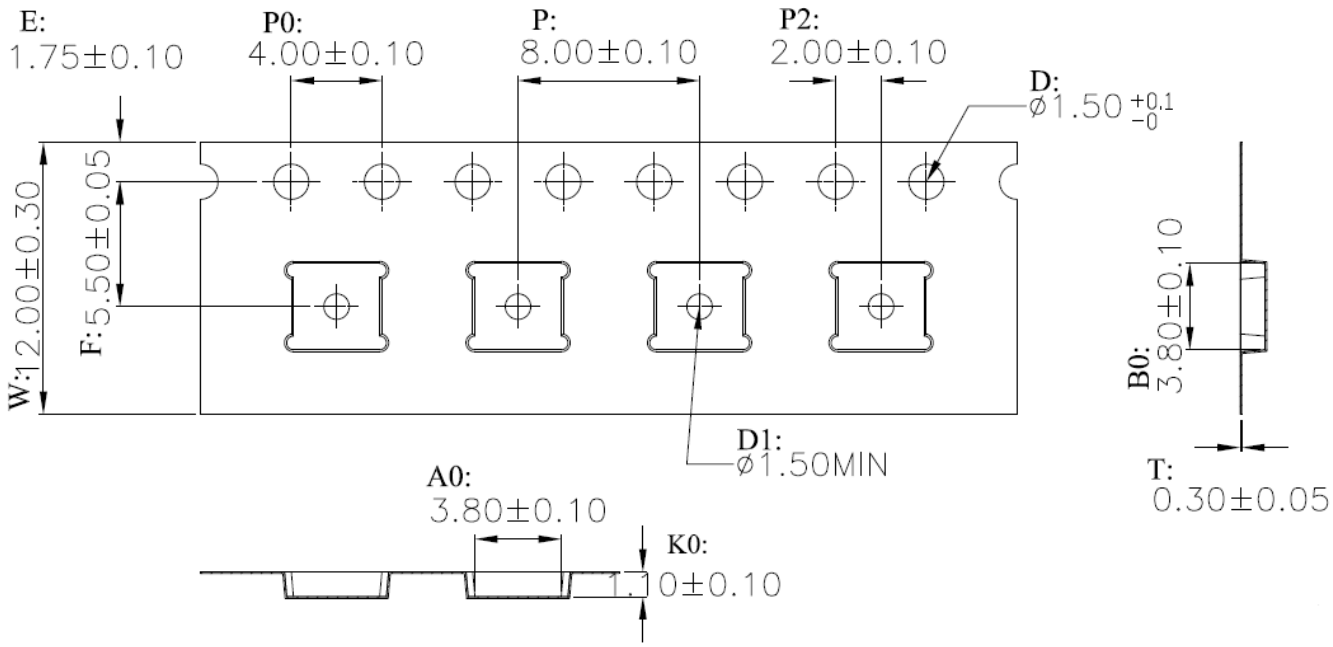

1. 10 sprocket hole pitch cumulative tolerance ±0.20.
2. Carrier camber is within 1 mm in 250 mm.
3. Material : Black Conductive Polystyrene Alloy.
4. All dimensions meet EIA-481-D requirements.
5. Thickness : 0.30±0.05mm.
6. Packing length per 19" reel : 490 Meters.(覆捲)
7. Component load per 13" reel : 6000 pcs.

W	12.00±0.30
A0	3.80±0.10
B0	3.80±0.10
K0	1.10±0.10

Cautions on Use

Eye and Skin Safety Guidelines

Do not directly look at the light when the LEDs are on. Proceed with caution to avoid the risk of damage to the eyes when examining the LEDs with optical instruments. Protect your eyes and skin when operating. Equipment should be designed to completely screen or filter UV radiation.

The attached label should be used on products and systems that use UV LEDs.

Usage and Handling

1. LEDs should be kept away at all times from volatile organic compounds as well as hazardous, acidic, and corrosive substances, such as sulfur, chlorine, hydrofluoric acid, etc. Failure from doing so may result in mechanical degradation of the LED package and/or decrease in electrical and optical performance.
2. Exposure to sudden temperature changes or high humidity level should be avoided.
3. Excessive mechanical force or vibration must be avoided.
4. Extreme care must be observed when handling the LEDs:
   a) Do not touch the component with bare hands to avoid contamination.
   b) Do not touch the optical window and/or lens of the LED package with sharp tools, such as tweezers, to avoid scratches.
   c) To minimize dust accumulation on the optical windows, place LEDs back into the container after usage during storage.
5. Only apply forward electrical current to the LEDs within the specification. Overdriving LEDs or applying reverse current may cause damage to the device.

Cleaning

1. Do not scrub the LEDs using hard brush or with excessive force.
2. Do not clean LEDs using acetone or trichloroethylene.
3. To clean LEDs, only use soft foam-tip cleanroom swab and isopropyl alcohol with gentle cleaning motions. Distilled water can be used for rinsing, but LEDs must be completely dried (for example with nitrogen blow dry) before they can be used.
4. Electrical and optical measurements are recommended before and after cleaning to ensure that LEDs are not damaged.

Static Electricity

Wristbands and anti-electrostatic gloves are strongly recommended and all devices, equipment and machinery must be properly grounded when handling the LEDs, which are sensitive to static electricity. Precautions should be taken against surge voltage to the equipment that mounts the LEDs. Unusual characteristics such as significant increase of current leakage, decrease of turn-on voltage, or non-operation at a low current can occur when the LED is damaged.

Thermal Management

1. Careful design of thermal management system is required for optimal performance of the LEDs.
2. Air- or water-cooled system may be used in conjunction with the heat sink.
3. The thermal management system must be designed such that the LED temperature doesn't surpass the maximum junction temperature.

Recommended Circuit

Operation in series mode:

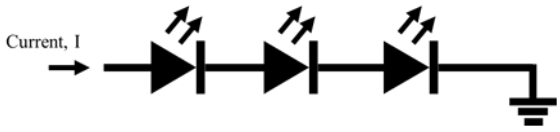

Recommended operation in parallel mode:

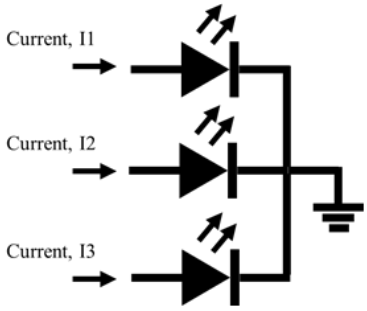

About RayVio

RayVio Corp. is an advanced health and hygiene company that delivers clean water and environments. RayVio helps protect billions from germs and creates new markets and revenue streams by enabling a new class of products. Its powerful and efficient UV LED technology can be integrated into a variety of applications, powering versatile on-demand solutions that give consumers control over health without chemicals or costly consumables. To learn more, please visit www.rayvio.com.